Units: mm

●VRE-P062SAC

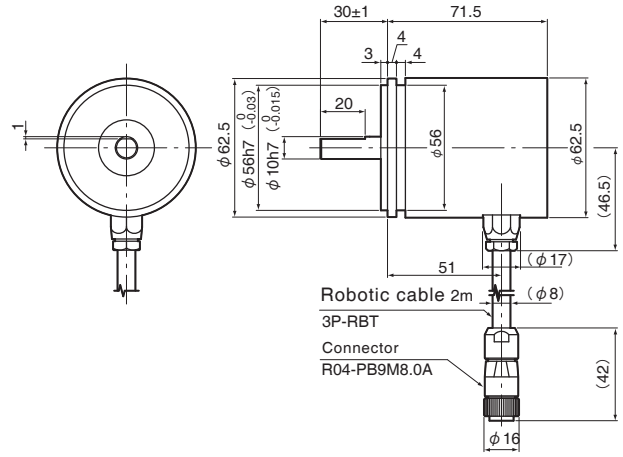

●VRE-P062SBC

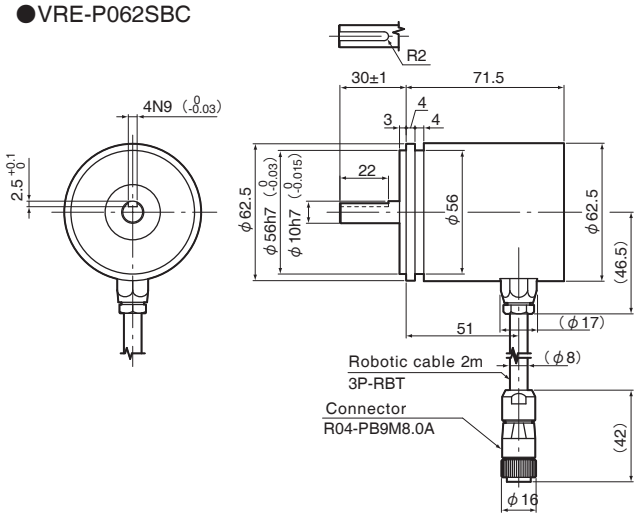

●VRE-P062S□CAccessory Model : SB-01
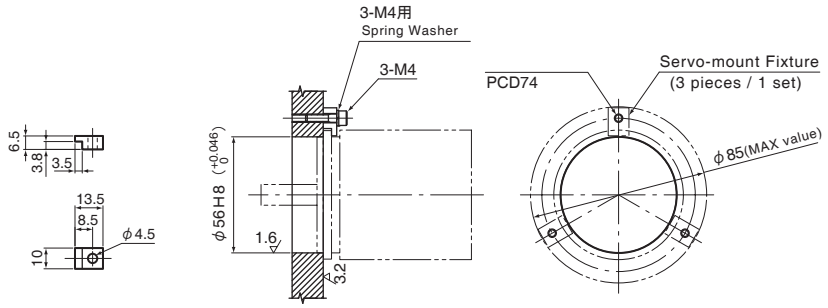
Mounting fixture for VRE-P062S□C Servo mount . (3 pieces set)